福井大学リポジトリ
UNIVERSITY OF FUKUI REPOSITORY

On a Hot-Wire Gas Flow Meter

メタデータ	言語: English 出版者: 公開日: 2011-11-15 キーワード (Ja): キーワード (En): 作成者: DANNO, Masaru メールアドレス: 所属:
URL	http://hdl.handle.net/10098/4483

On a Hot-Wire Gas Flow Meter

Masaru DANNO*

(Received March 30, 1977)

In a section of Lawrence Berkeley Laboratory (LBL), Berkeley Calif., it has been developed a new type of atomic absorption spectrometer[1] which makes possible measurement of a mercury content of a solid or liquid sample without previous chemical separation of the Hg from the host material. In this technique, the sample is thermally decomposed in a furnace maintained at a temperature near 1000°C. The decomposition products is swept into a heated absorption tube by a stream of carrier gas. Flow rate of this carrier gas was measured by a rotameter. Such a rotameter was quite inconvenient to supply for the computating. I, therefore, suggested a hot-wire flow meter use to this technique. This flow meter can transduce flow rate to an electric current and so the flow rate can be obtained from the current, moreover, which may be used as input signal for the computer.

The principal part of this instrument is a glass tube in which a fine hot-wire (which is made of platinum and has a diameter of 0.025mm and a length of 75mm) is stretched. Such a tube is made with following process;

1. Providing the glass tube which has a length of 35mm and an inside diameter of 1.0mm as in Fig.1 (a)

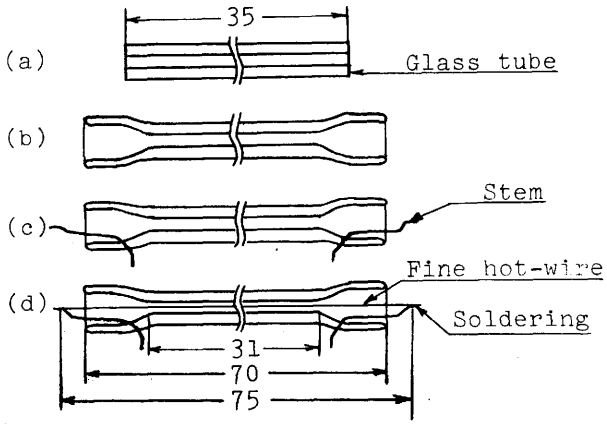

Fig.1 Hot-wire probe making process.

2. Deforming both ends of this tube as in (b)
3. Arranging two stems as in (c)
4. Soldering both ends of the hot-wire stretched in the tube to the stems as in (d)

This tube is set vertical and a gas whose flow rate should be measured is made to flow through the tube.

* Dep. of Mechanical Eng.-B

Schematic of hot-wire flow measurement circuit is as shown in Fig.2 On this figure, hot-wire R_1 which is stretched in the tube is connected to a bridge circuit. R_2 is also a hot-wire for the purpose of temperature

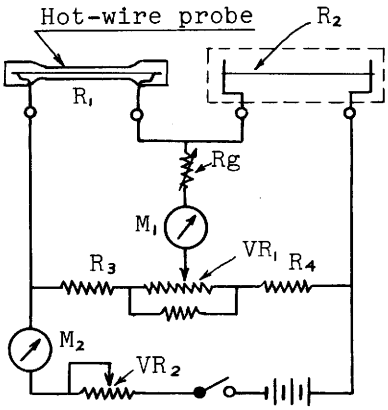

Fig.2 Schematic of flow meter circuit.

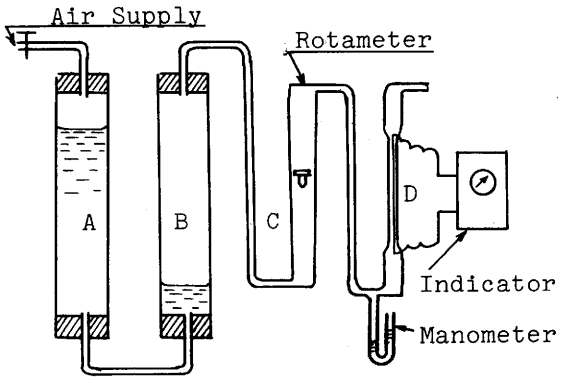

Fig.3 Apparatus for the calibration of the hot-wire flow meter.

compensation and installed in a small chamber. Both R_1 and R_2 are about 100°C, 24Ω at working conditions. R_3 and R_4 are manganin resistors with 24Ω . The current 300mA is supplied to a measuring circuit and this is measured by the ammeter M2. M_1 is a micro ammeter with an internal resistance 3220kΩ for measuring bridge current which corresponds to the flow rate. VR_1 , VR_2, and Rg are variable resistors. VR_1 is for null adjustment with 25Ω , VR_2 is for current adjustment in 300mA, and Rg is for sensitivity adjustment which should be kept constant after the sensitivity is adjusted.

Apparatus of the calibration of the hot-wire flow meter is as shown in Fig.3. When the compressed air is supplied into the cylindrical reservoir A, water surface in the reservoir lowers and water surface in the reservoir B rises. Gas in the B, therefore, flows through the rotameter C and the gas is also swept into the hot-wire probe D. Flow rate of the gas through probe D is proportional to the reading of rotameter C. the flow rate

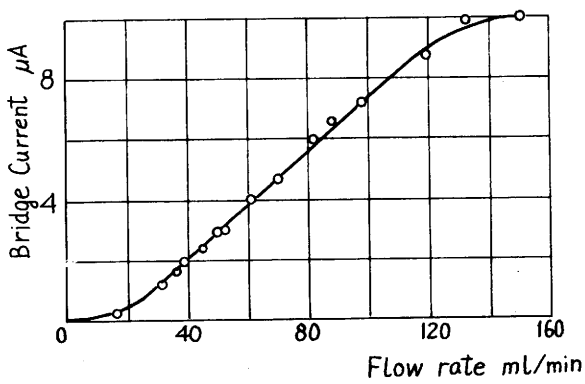

Fig.4 Relation between flow rate and bridge current.

of the gas can be obtained from the reading of the M_1, for these correspond to each other. Moreover, reading of the C is checked by rising speed of the water surface in the cylindrical reservoir B.

The result obtained by using this apparatus is as shown in Fig.4. Flow rate of the gas is proportional to the reading of the bridge current as long as the flow rate of the gas is less than 120ml/min except so little flow rate. At the flow rate over it, sensitiveness of the bridge current decreases with increasing flow rate.

Pressure loss of the hot-wire probe is 488mmAq at the flow rate in 120ml/min, and Reynolds Number in the probe is 159.

Measuring range may be easily extended, if the inside diameter of the hot-wire probe is made larger than this probe above mentioned.

Acknowledgment

The work reported here was done in Chemistry Division, LBL, the University of California, and I wish to express my thanks to Dr. Hadeishi for suggesting this work. Thanks are also due to Dr. R.D. McLaughline for much help regarding to this experiment.

Reference

1) T. Hadeishi, D.A. Church and others, Prepared for U.S Atomic Energy Commission under W-7405-Eng-48, LBL-1593, Feb. 1973.